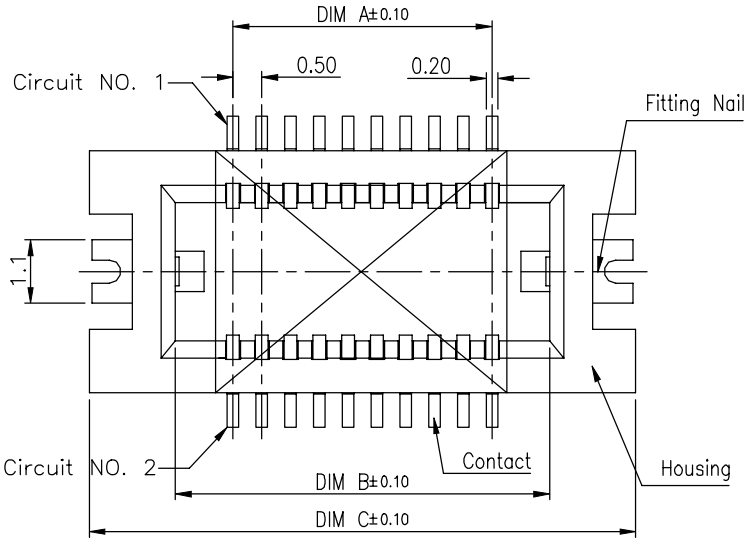

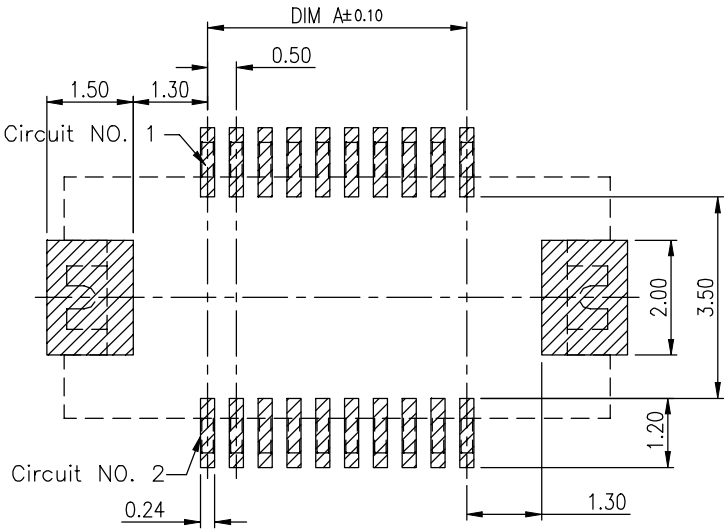

RECOMMENDED PCB LAYOUT
GENERAL TOLORANCE ±0.05

NOTES:
1. MATERIAL:
   1.1 HOUSING: THERMOPLASTIC, HIGH TEMP.,UL94V-0; COLOR:BLACK.
   1.2 CONTACT: COPPER ALLOY
   1.3 FITTING NAIL:COPPER ALLOY
2. FINISH:
   2.1 CONTACT:
      UNDERPLATING: 50~100u" NICKEL OVERALL.
      1:GOLD FLASH PLATING
      N:100~200u" MATT TIN PLATING
      UNDERPLATING: 70u"min NICKEL OVERALL.
      C:15u"GOLD ON CONTACT AND GOLD FLASH ON OTHERS
   2.2 FITTING NAIL:
      UNDERPLATING: 50~100u" NICKEL OVERALL.
      100~200u" MATT TIN PLATING
3. REFLOW SOLDER CAPABLE TO 260°C PER ACES SPEC.
4. SPEC. PLS. REFER TO PS-50019-xxxxx-xxx
5. PACKAGE PLS. REFER TO 88079-xxxxB-TRP
6. PART NUMBER
   50152-XXX X X-XXX

XXX	Housing Color	Halogen Free
001	Black	HF

NO OF CKT

PACKING
0:TAPE REEL
4:TAPE REEL WITH MYLAR

PLATING
1:GOLD FLASH
N:MATT TIN
C:15u" GOLD ON CONTACT AND GOLD FLASH ON OTHERS

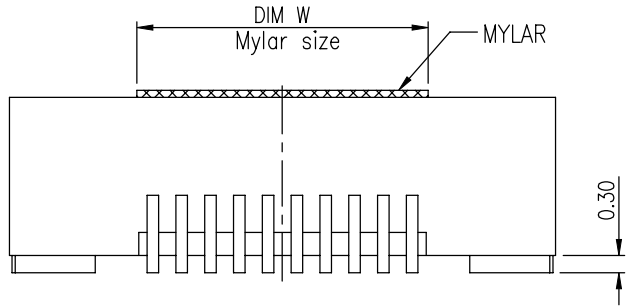

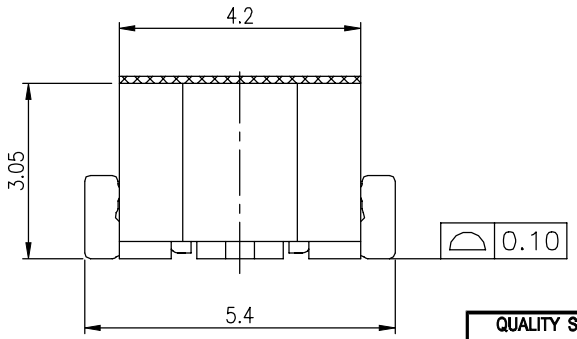

CKT	DIM A	DIM B	DIM C	DIM W(M/Size)
16	3.5	5.5	8.5	6.0
20	4.5	6.5	9.5	6.0
26	6.0	8.0	11.0	6.0
30	7.0	9.0	12.0	6.0
40	9.5	11.5	14.5	6.0
50	12.0	14.0	17.0	10.0
60	14.5	16.5	19.5	10.0
70	17.0	19.0	22.0	10.0
80	19.5	21.5	24.5	15.0
100	24.5	26.5	29.5	15.0
120	29.5	31.5	34.5	15.0

QUALITY SYMBOLS
MAJOR Ⓜ
CRITICAL Ⓒ

GENERAL TOLERANCES
(UNLESS SPECIFIED)
X. ±0.5
.X ±0.25
.XX ±0.15
.XXX ±0.1
ANGLES ±2°

DRAWN BY: Huang,ShunSen	DATE: 20'/07/20	ACES ELECTRONICS
CHECKED BY: Lu, Jing Quan	DATE: 20'/07/20	TITLE: 0.5mm BTB PLUG.W/O BOSS SMT D/R S/T TYPE
APPROVED BY: hsieh, fu yu	DATE: 20'/07/20	
UNITS: mm		SIZE: A4 / RFQ NO.: N/A
SCALE: 1:1	SHEET NO.: 1 OF 1	REV: B / DWG NO.: 50152-XXXXX-XXX